WELDING PROCEDURES			
WELD	PROCESS	POSITION	SPECIAL INSTRUCTIONS

LINCOLN® ELECTRIC

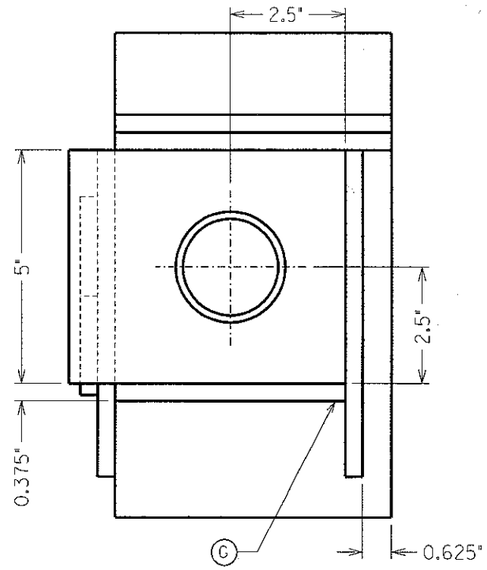

TOP VIEW

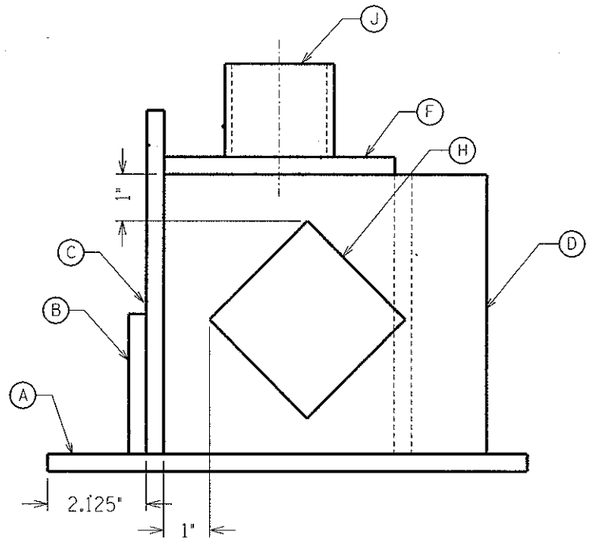

LEFT SIDE VIEW

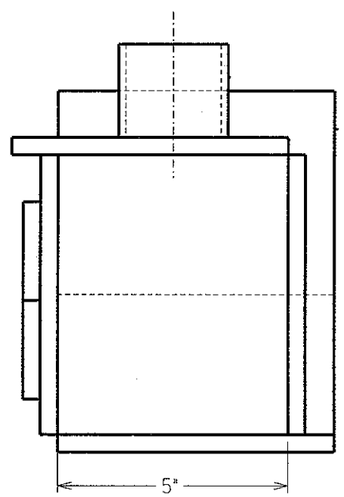

FRONT VIEW

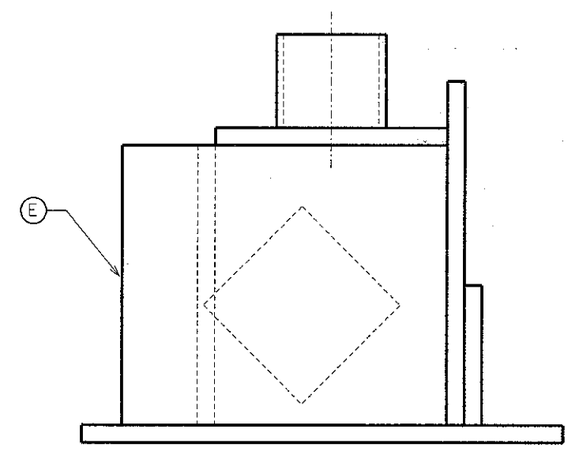

RIGHT SIDE VIEW

PART NO.	Qty.	DESCRIPTION
J	1	2" x 2" SCHEDULE 40 PIPE
H	1	3" x 3" x 3/8" STL PLATE
G	1	6" x 5" x 3/8" STL PLATE
F	1	6" x 5" x 3/8" STL PLATE
E	1	6" x 7" x 3/8" STL PLATE
D	1	6" x 7" x 3/8" STL PLATE
C	1	6" x 7" x 3/8" STL PLATE
B	1	6" x 3" x 3/8" STL PLATE
A	1	6" x 11" x 3/8" STL PLATE

BILL OF MATERIAL

MACH

STATE SKILLS U.S.A.

ASSEMBLY

DRAWN	B. WILLIAMS	DATE 1-22-08	SCALE
CHK'D	O.K.	SW- 2012-011	A
MACH NO.	LOC.		